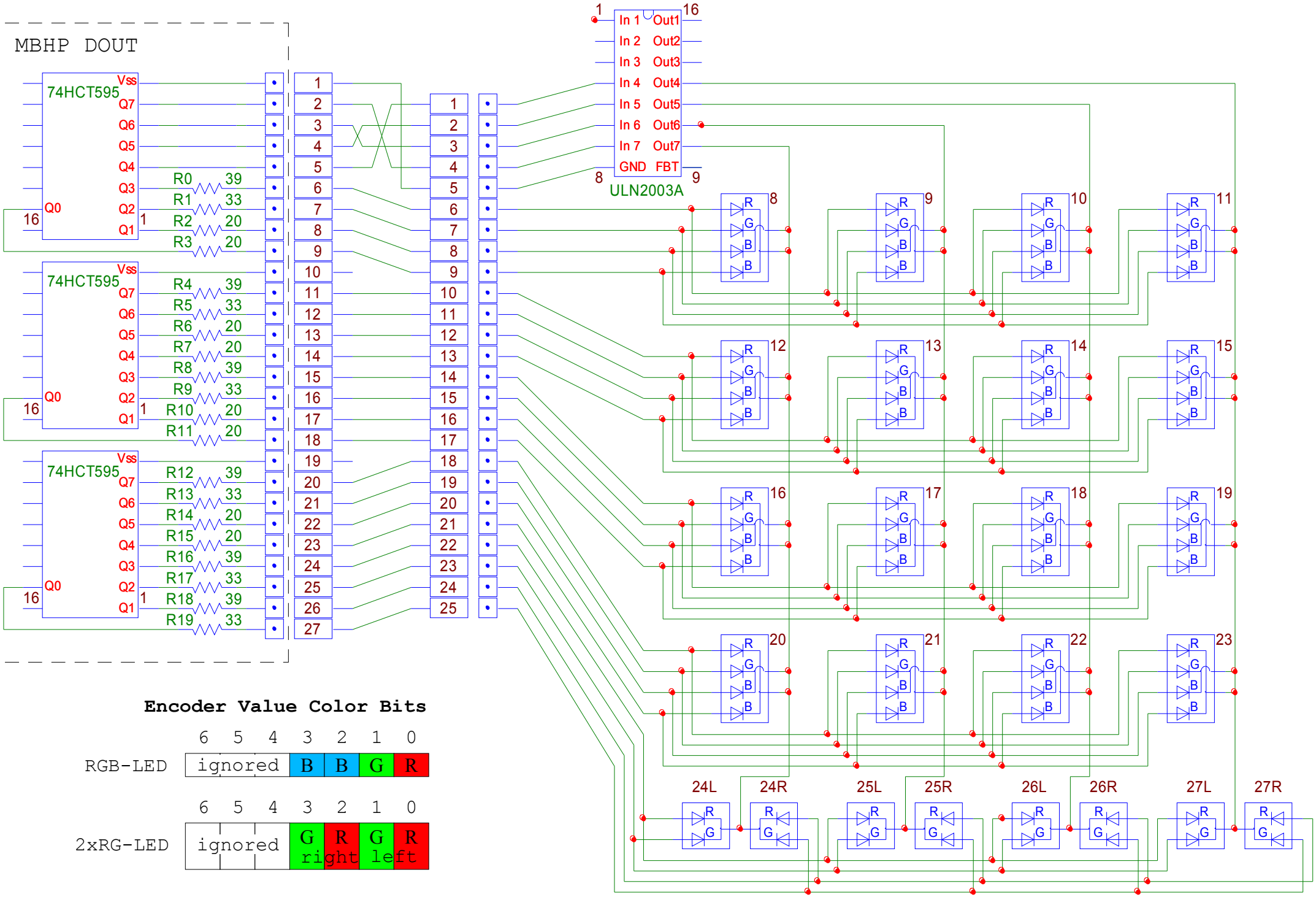

Encoder Value Color Bits

	6	5	4	3	2	1	0
RGB-LED	ignored			B	B	G	R
2xRG-LED	ignored			G right	R right	G left	R left

© 2005 Ralf Suckow. All rights reserved.